NOTES: UNLESS OTHERWISE SPECIFIED

REVISIONS				
ZONE	SYM	DESCRIPTION	DATE	APPROVAL
	–	RELEASED FOR MANUFACTURING		

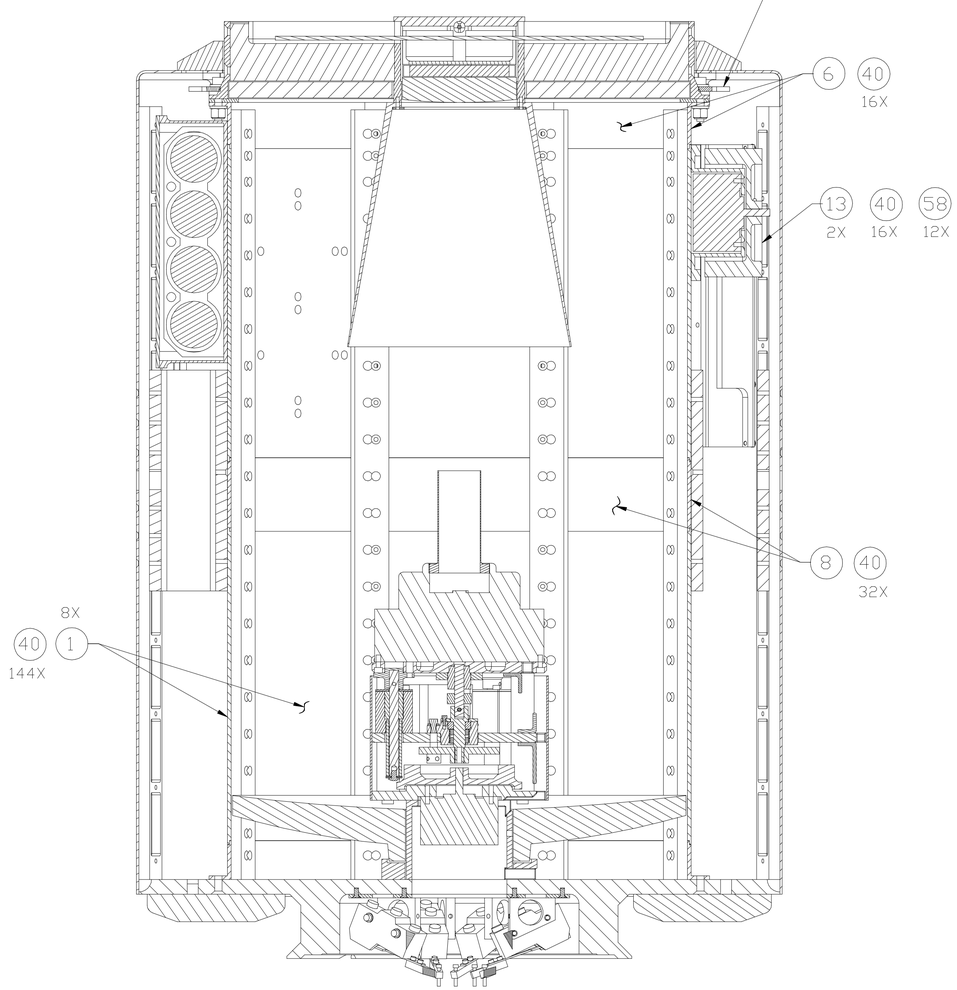

SECTION A-A

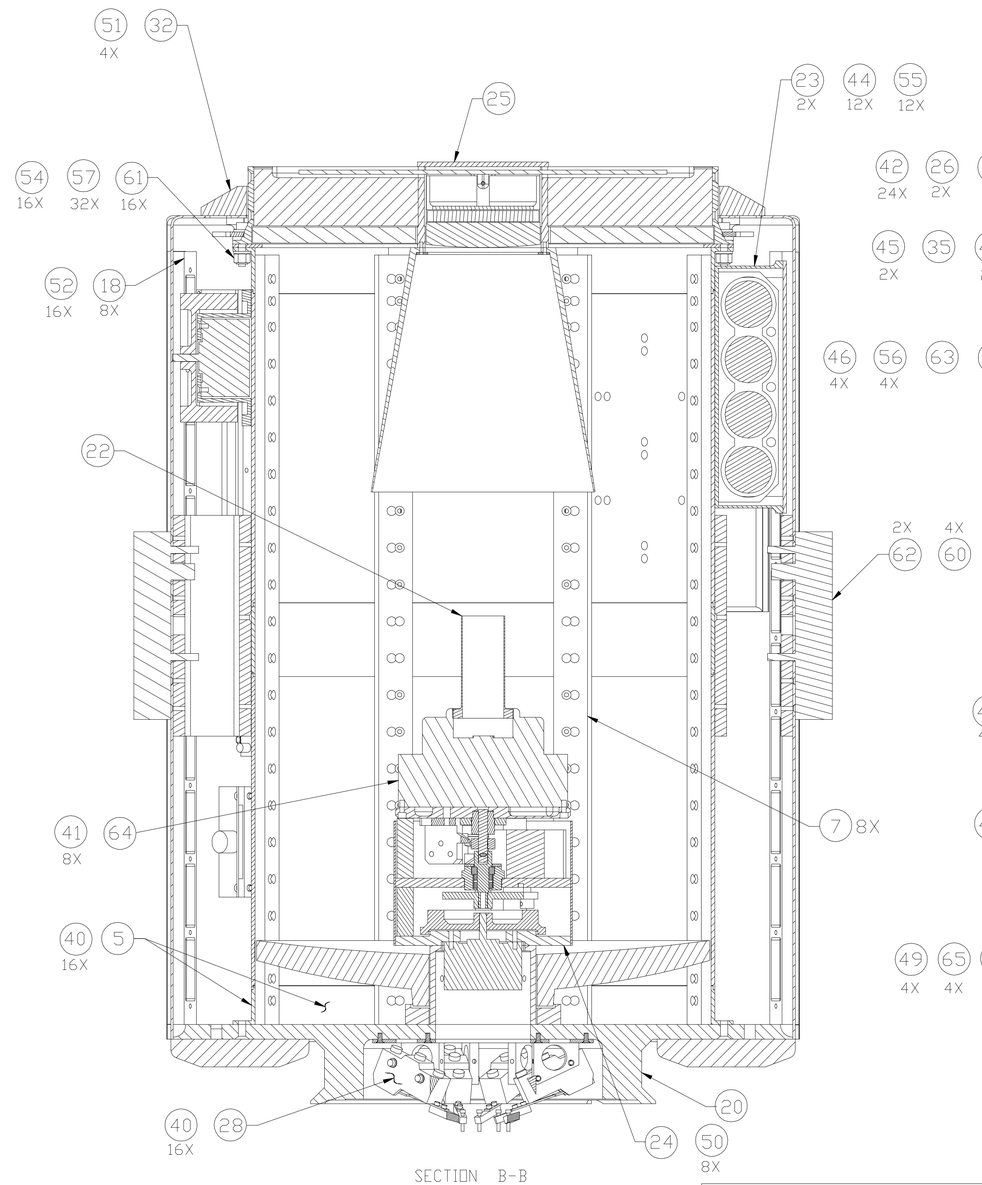

SECTION B-B

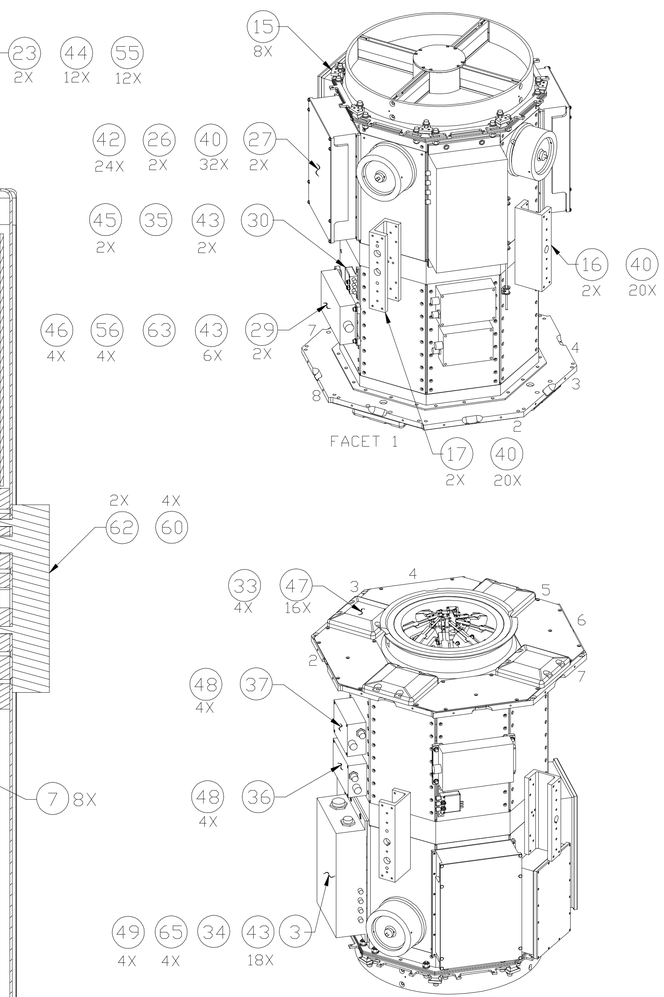

NATIONAL AERONAUTICS AND SPACE ADMINISTRATION	Goddard Space Flight Center	GREENBELT, MARYLAND	
UNLESS OTHERWISE SPECIFIED–DIMENSIONS ARE IN INCHES TOLERANCES: .XX ±.01 .XXX ±.005 ∠ ±1° FRACTIONS ±1/16 63 REMOVE ALL BURRS AND SHARP EDGES .010R OR CHAMFER MAX.	NAME / INIT / DATE	DRAWING INTERPRETED PER GSFC-X673-64-1E	
☐ FLIGHT HARDWARE/POST FAB HARDNESS TEST REQUIRED ☒ HARDNESS TEST NOT REQUIRED ☐ TEST HARDNESS PER ASTM E-18, LOCATION OPTIONAL ☐ TEST HARDNESS PER ASTM E-18 WHERE INDICATED ON FIELD OF DRAWING THUS ⊛ ☒ NO NON-DESTRUCTIVE EXAMINATION (NDE) REQUIRED ☐ NDE REQUIRED PER S-313-009 CODE _____	DESIGNER W. WELCH DRAWN W. WELCH CHECKED – APPROVED D SKILLMAN APPROVED – APPROVED – APPROVED-ENGINEER –	TITLE ASSEMBLY, SPACECRAFT, SIMPLESAT	
THIS DRAWING WAS PRODUCED USING: SOFTWARE: AUTOCAD VERSION: 14 FILE NAME: 2020121_3.DWG	NEXT ASSY: NONE USED ON: SIMPLESAT	GD 2020121 –	
		CODE 924 / SCALE 1/2 / WT / SH 3 OF 3	

GD 2020121 –